WiFi HaLow Analysis and PCB-Design

Semester project

Alain Wymann and Alex Tschumper
Supervisor: Dr. Lorenzo Bergamini

Content

- Idea, use-case and goal
- Planning
- Hardware
- Firmware
- Results
- Final Thoughts & Next Steps

Idea and use-case

Get Smart-meter data across multiple floors

- Requires good penetration
- Long distances
- Low power
- Easy to integrate with IoT-Devices

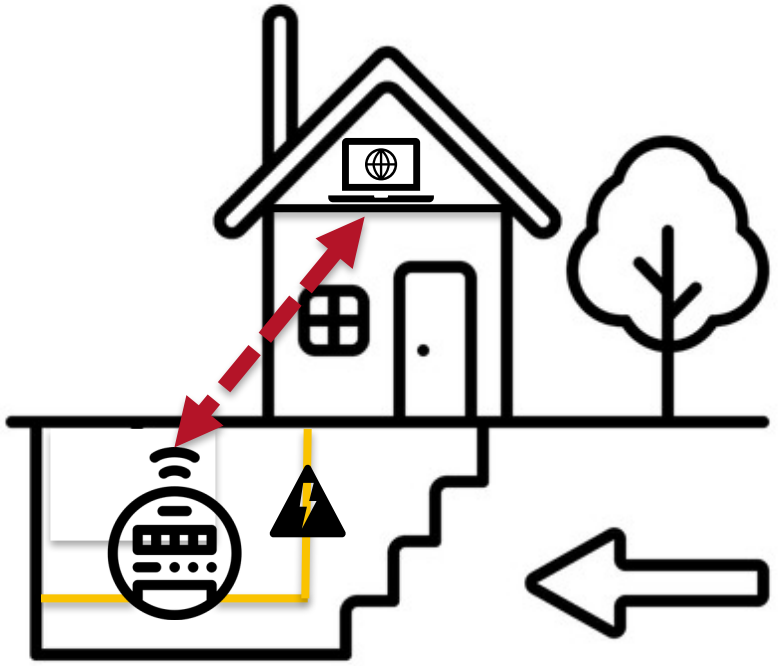

WiFi-HaLow

WiFi-HaLow – 802.11ah

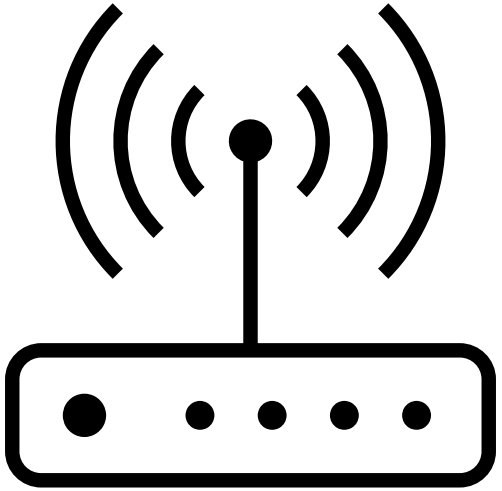

- Newer low frequency WiFi standard
- Long range
- Native IP-Support
- Progress slowed by regulations:
- Different Frequency-band (863 - 868 MHz)
- Lower transmitting power (11dBm)

- US-solutions already exist but are not permitted in the EU

Goals

1. Priority

- Documentation
- Hardware development
- FGH100MAAMD module
- ESP-Microcontroller
- Antenna connector
- SPI-Interface
- Build communication
- RX and TX packages
- ...

2. Priority

- Iperf demo
- RF matching network
- Read Link-Quality
- Terminal applications

3. Priority

- DC-Supply
- SDIO-Interface
- PCB and Ceramic Ant.
- Tasmota integration

Planning

- Develop the concept
- Studying FGH100MAAMD Module and Documentation
- Breadboard Prototype
- First integration and testing using Breadboard Prototype
- Final PCB-Design
- Firmware development
- Testing

Hardware Design
XIAO ESP32S3
SPI & SDIO Interface
ECH100MAAMD

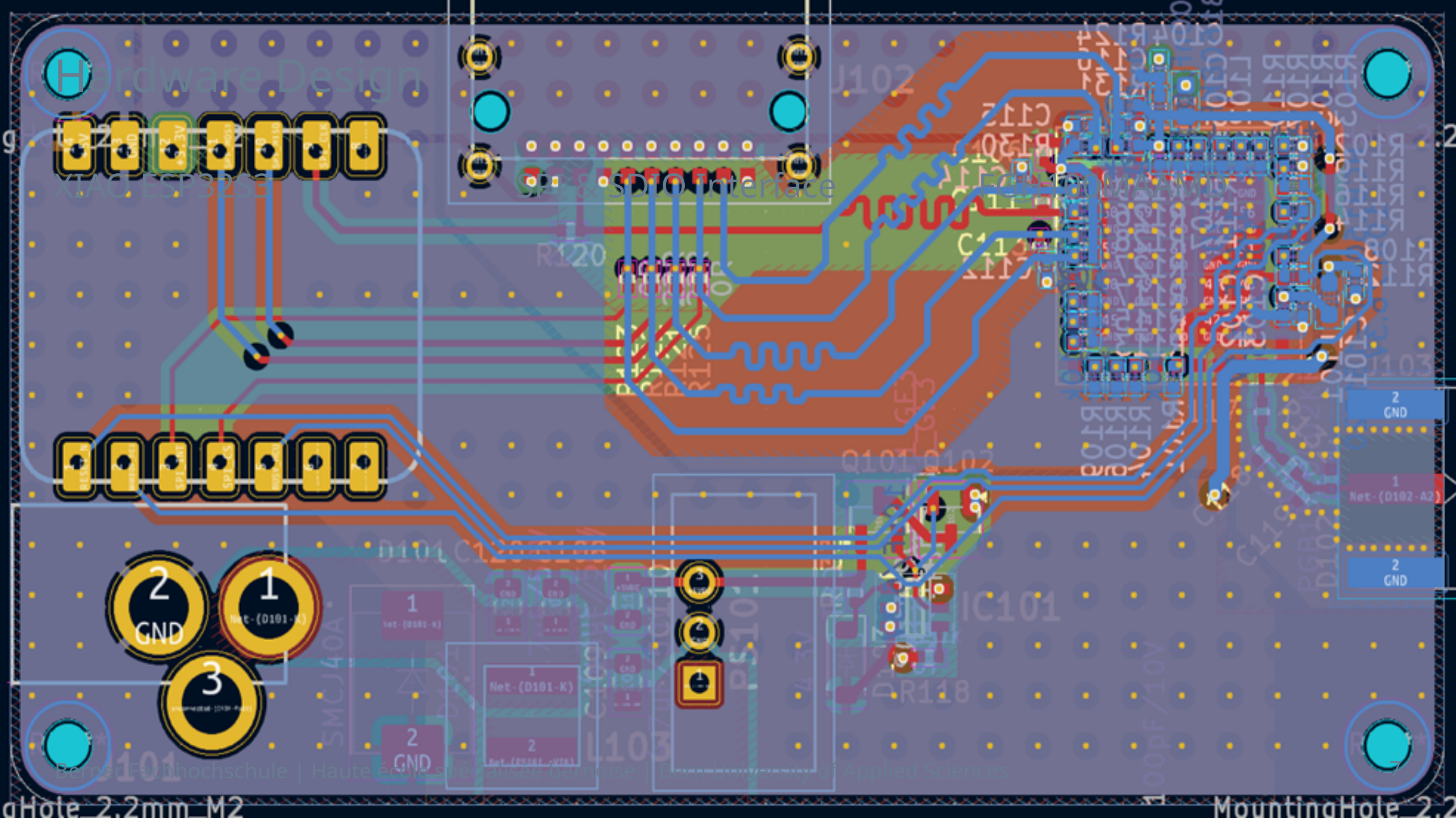

Hardware Design

DC-Supply

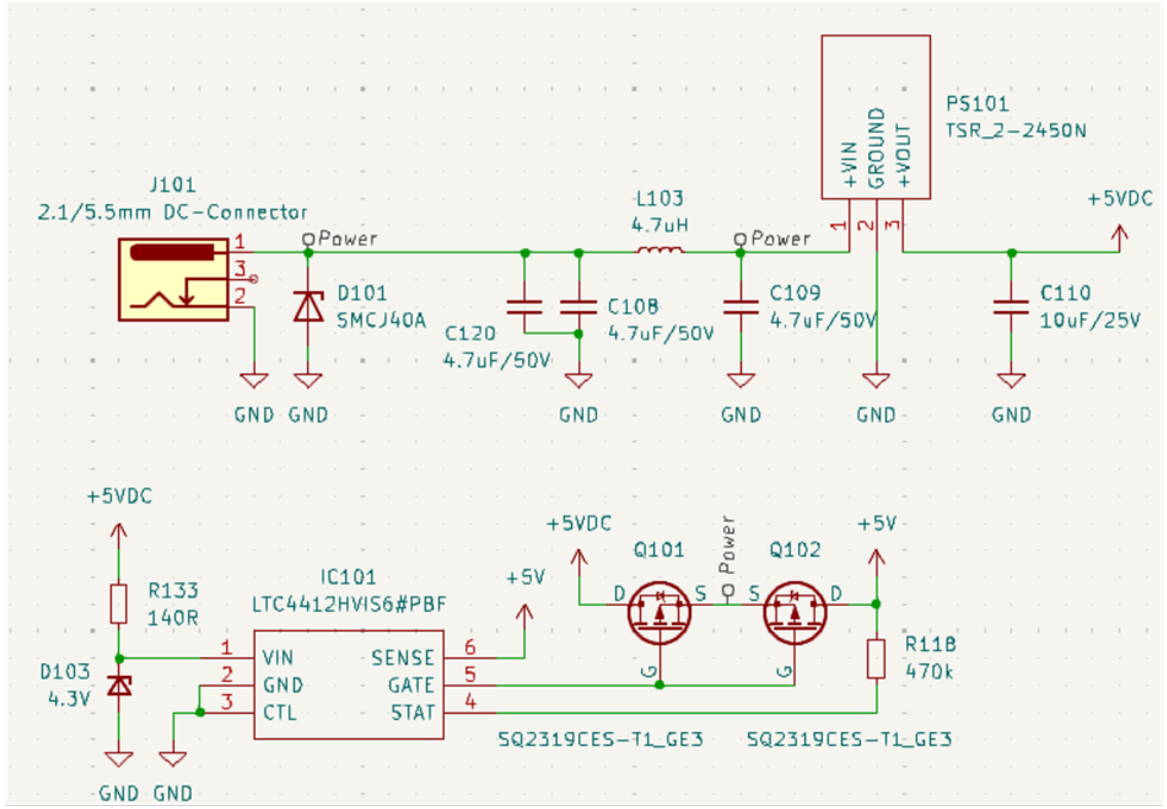

Challenge

- How to switch bidirectional power?

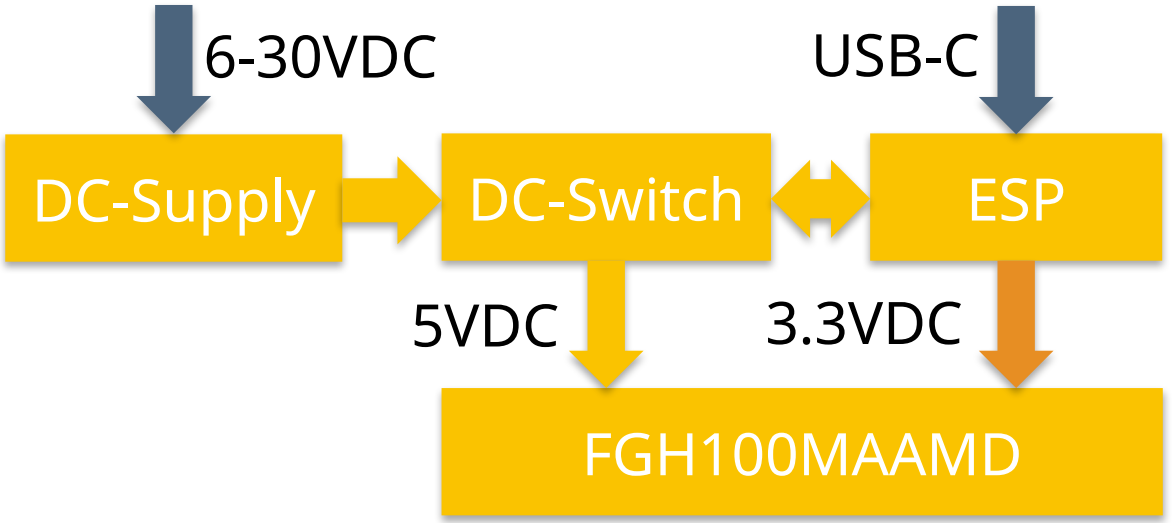

RF-Circuit

- 868MHz
- Z_0 = 50Ω
- Trace width using JLC-Calculator
- Z of SMA?
- Effect of the Parts on the transmission line

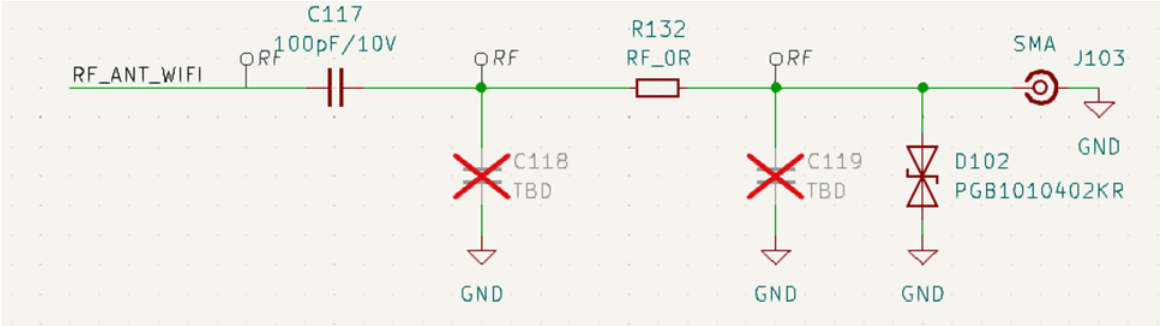

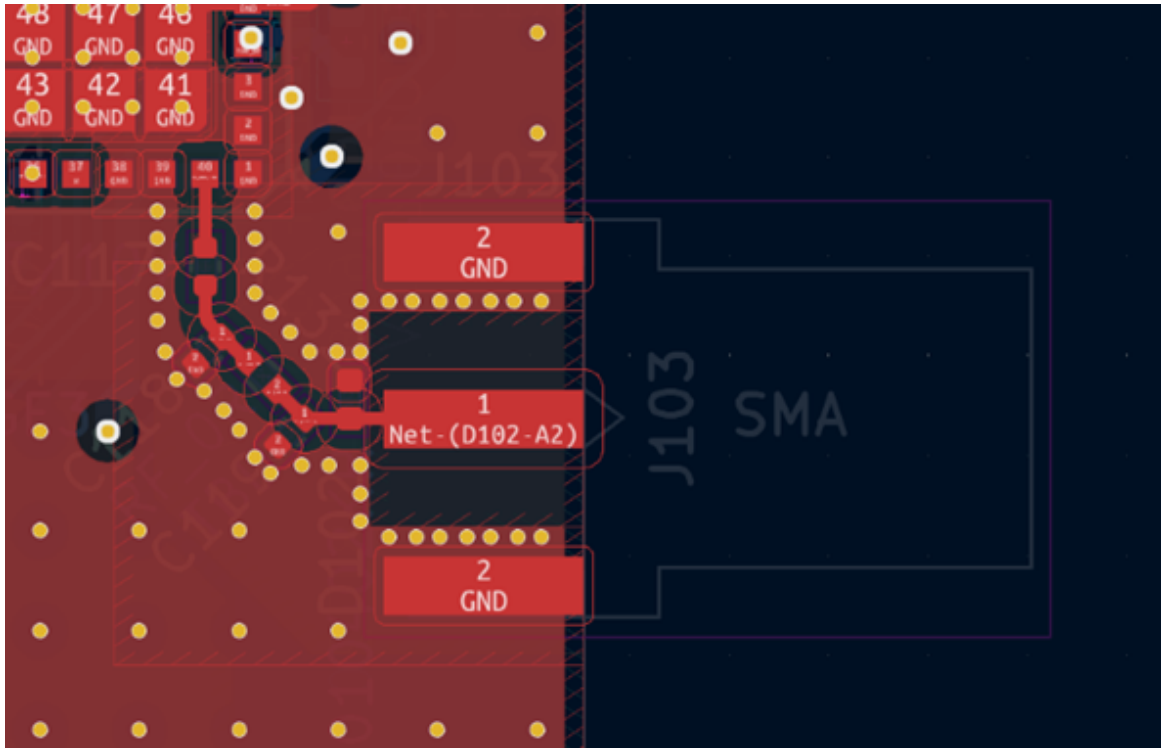

Effect of Parts on the VSWR

Before VSWR=1.10≈0.23%

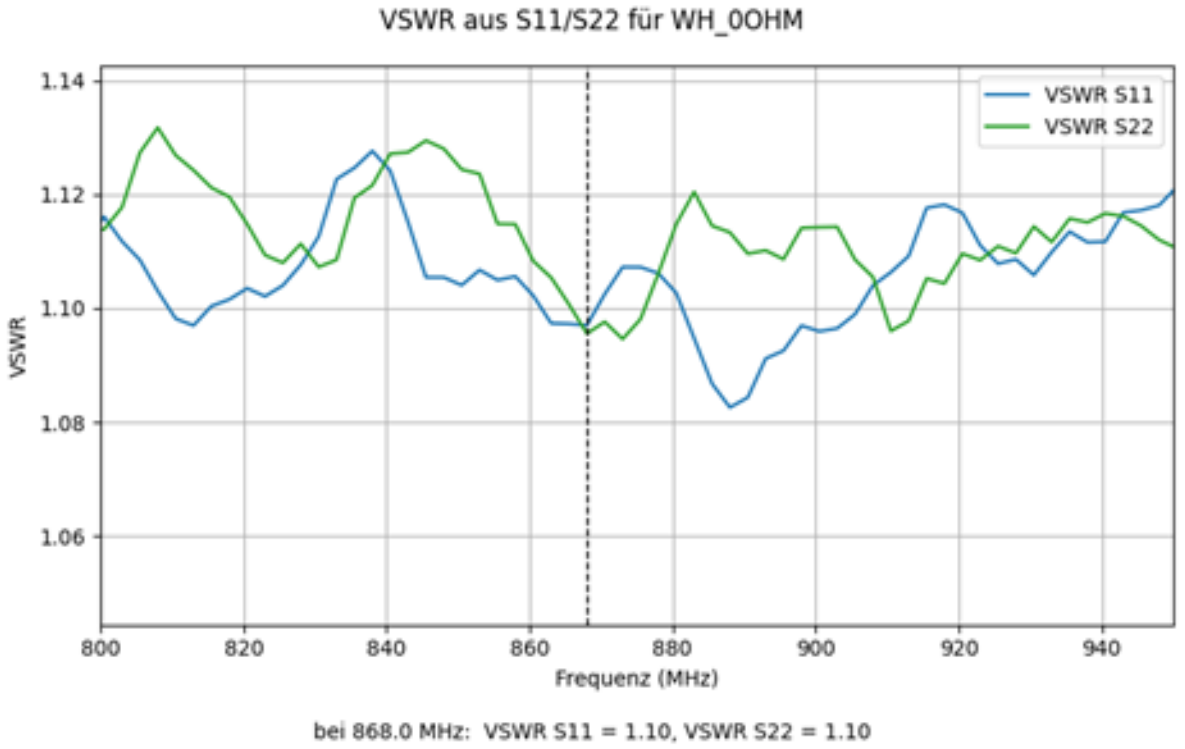

After VSWR=1.04≈0.038%

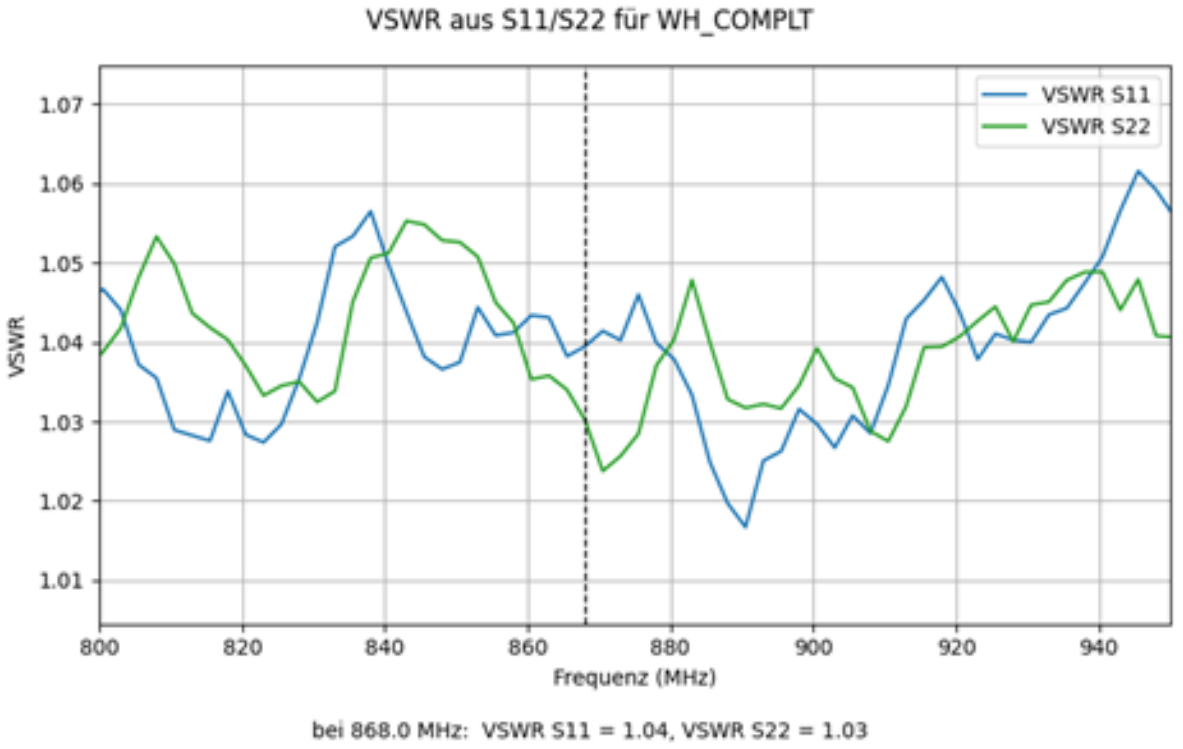

Spectrum and RF-Power

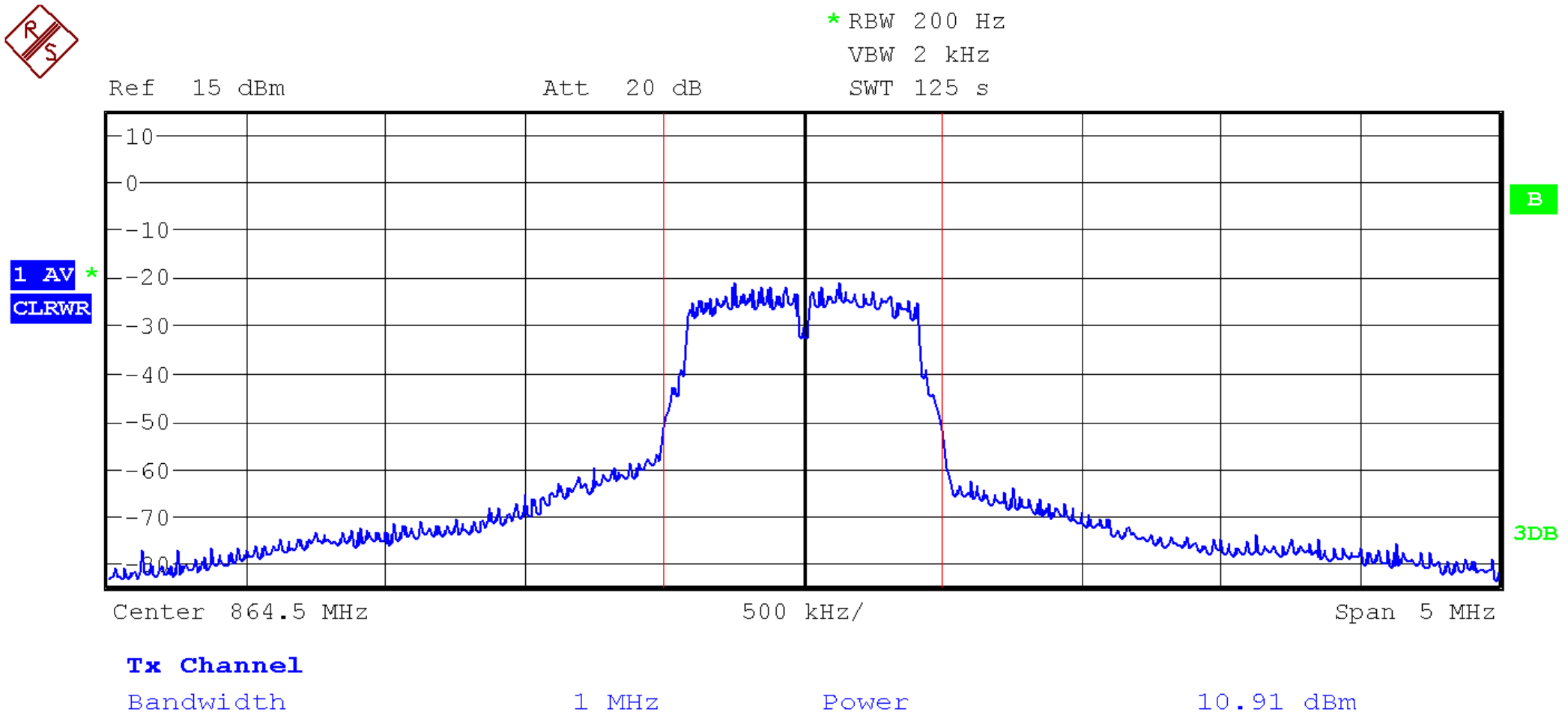

Firmware

- Module FGH100MAAMD uses the mm6108 chip
- SPI-Commands for mm6108 are proprietary -> MorseMicro Framework
- mm-iot-esp32 currently does not support AP-Application
- AP-Application using Raspberry Pi
- Final working config:

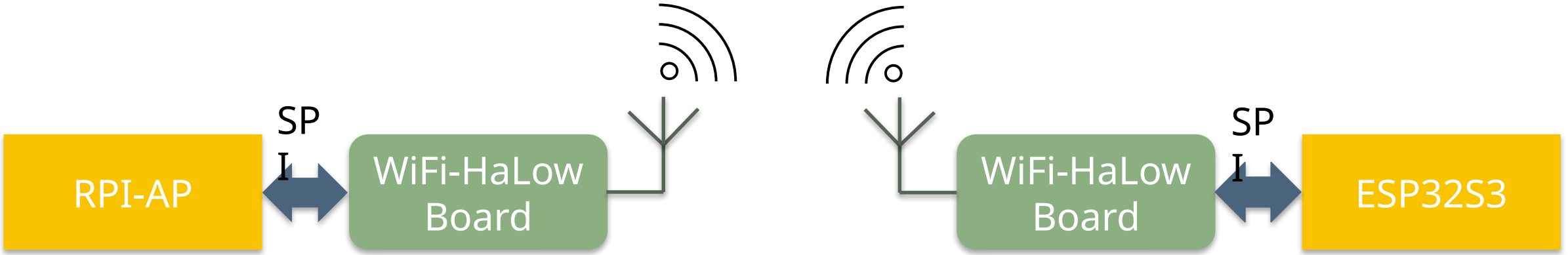

Results - iperf

- Difficult to measure meaningful data
- Three measurement configurations
- Stable connection in all measurements
- Only a small drop in throughput with multiple floors separation

- Connection quality is highly dependent on antenna-alignment
- Best results are achieved when the antennas are in the same position on different floors

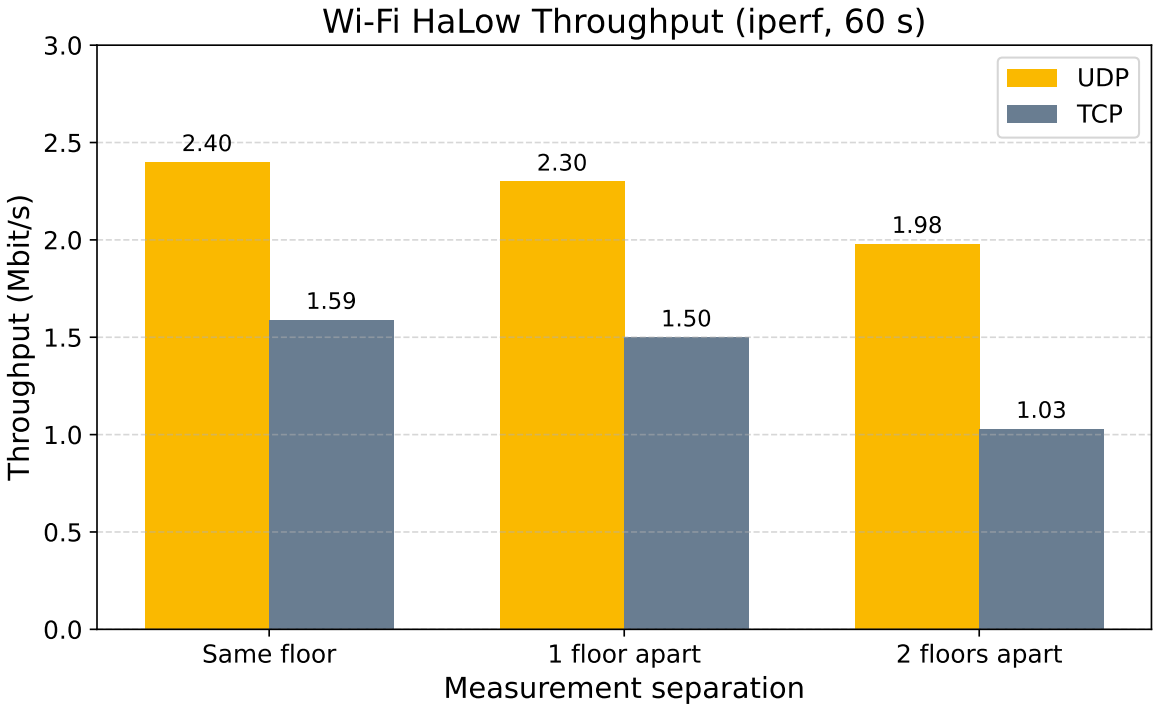

Results – UDP jitter and loss

- UDP iperf measures both jitter and loss
- Jitter increases with larger separation

- No losses recorded with good antenna setup
- With bad antenna alignment some packet loss was measured

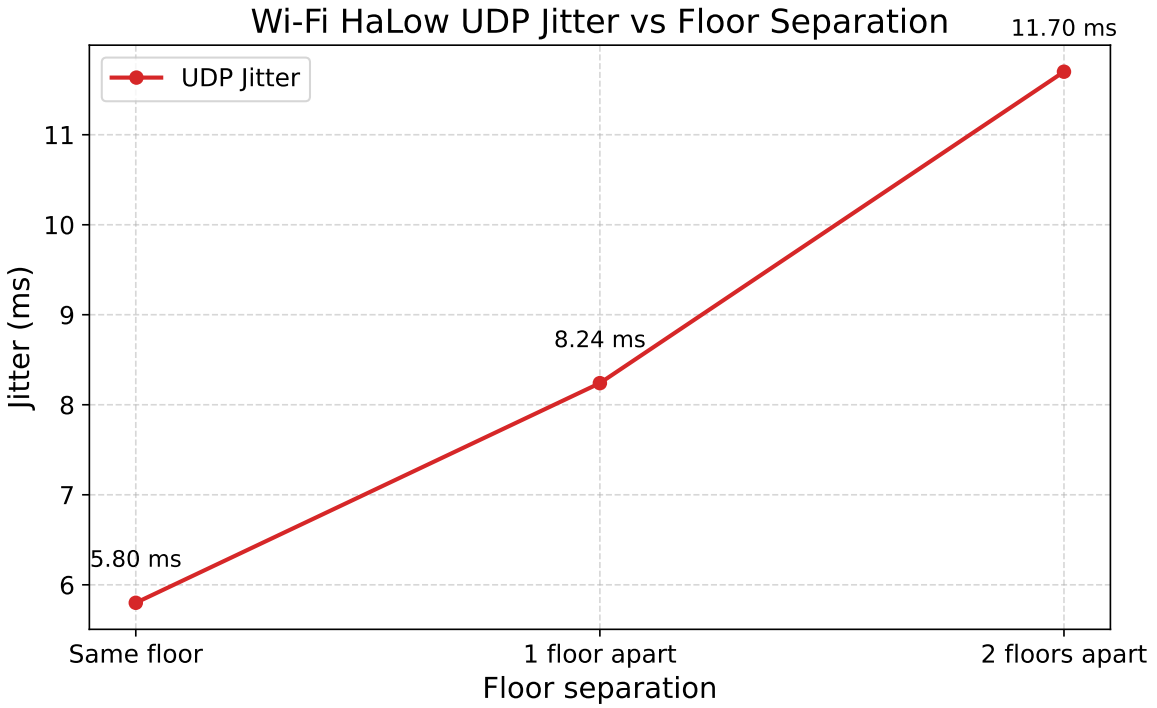

2.4 Mbit/s

Model	Ordering Code	Antenna	Max. Physical Rate	Certification
FGH100M	FGH100MAAMD	One Wi-Fi antenna	3.3 Mbps	CE

72% of physical rate using UDP

Goals

1. Priority

- ✓ Documentation
- ✓ Hardware development
- ✓ FGH100MAAMD module
- ✓ ESP-Microcontroller
- ✓ Antenna connector
- ✓ SPI-Interface
- ✓ Build communication
- ✓ RX and TX packages

2. Priority

- ✓ Iperf demo
- ✓ RF matching network
- ✓ Read Link-Quality
- ✗ Terminal applications

3. Priority

- ✓ DC-Supply
- ✓ SDIO-Interface
- ✗ PCB and Ceramic Ant.
- ✗ Tasmota integration

Final Thoughts & Next Steps

- Board verified and communication achieved
- Manufacturer provides incomplete documentation
- Access-Point support planned for next version of ESP-framework
- Directional antennas would improve link quality for two stationary antennas

- Next Steps:
- Antenna test
- Further measurements on bandwidth and range
- Implementation into use case

Questions